TFT MODULE SPECIFICATION

RVT4.3B480272CFWN00 V5

4.3" EVE 1 LCD TFT DATASHEET
Rev. 1.0
2026-11-18

Riverdi Sp. z o.o.

Nowy Swiat 36
80-299 Gdansk, Poland
VAT ID: PL5842767153
Registration number (KRS): 0000923967

+48 587 703 116

Office hours: 9:00 to 17:30 CET (Mon-Fri)

contact@riverdi.com

riverdi.com

ITEM	CONTENTS	UNIT
Display Type	TFT/Transmissive/Normally white	/
Size	4.3	Inch
Viewing Direction	12:00 (without image inversion)	O' Clock
Gray Scale Inversion Direction	6:00	O' Clock
Outside Dimensions (W x H x D)	106.30 x 83.98 x 7.12	mm
Active Area (W x H)	95.04 x 53.86	mm
Pixel Pitch (W x H)	0.198 x 0.198	mm
Resolution	480 (RGB) x 272	/
Driver IC	FT800	/
Brightness	550	cd/m2
Backlight Type	White LEDs	/
Interface Type	SPI / I2C	/
Color Depth	16.7M	/
Pixel Configuration	R.G.B Vertical Stripe	/
LCD Input Voltage	3.3	V
With / Without TP	Without Touch Panel	/
Weight	TBD	g

Note 1. RoHS compliant

Note 2. LCM weight tolerance: ± 5%.

1. REVISION RECORD

REV NO.	REV DATE	CONTENTS	REMARKS
1.0	2026-11-18	Initial Release, PCN: RVD002-107	

2. CONTENTS

1. REVISION RECORD 3
2. CONTENTS 4
3. MODULE CLASSIFICATION INFORMATION 5
4. ASSEMBLY GUIDE 6
   4.1 Mounting frame 6
5. MODULE DRAWING 7
6. ABSOLUTE MAXIMUM RATINGS 8
7. ELECTRICAL CHARACTERISTICS 8
8. ELECTRO-OPTICAL CHARACTERISTICS 9
9. INTERFACES DESCRIPTION 12
10. FT800 CONTROLLER SPECIFICATIONS 13
    10.1 Serial host interface 13
    10.2 Block Diagram 14
    10.3 Host interface SPI mode 0 14
    10.4 Backlight driver block diagram 14
11. TIMING CHARACTERISTICS 15
    11.1 Timing table 15
    11.2 SYNC Mode Timing Diagram 16
    11.3 SYNC-DE Mode Timing Diagram 17
    11.4 DE Mode Timing Diagram 18
12. INSPECTION 18
13. RELIABILITY TEST 19
14. LEGAL INFORMATION 20
15. CONTACT 21

3. MODULE CLASSIFICATION INFORMATION

RV	T	4.3	B	480272	C	F	W	N	00	V5
1.	2.	3.	4.	5.	6.	7.	8.	9.	10.	11.

NO.	PARAMETER	SYMBOL
1.	BRAND	RV – Riverdi
2.	PRODUCT TYPE	T – TFT Standard
3.	DISPLAY SIZE	4.3 – 4.3”
4.	MODEL SERIAL NO.	B (A-Z)
5.	RESOLUTION	480272 – 480x272 px
6.	INTERFACE	C – TFT + Controller
7.	FRAME	F – With Mounting Metal Frame
8.	BACKLIGHT TYPE	W – LED White
9.	TOUCH PANEL	N – Without Touch Panel
10.	VERSION	00 (00-99)
11.	MODULE REVISION	V5

© 2026 Riverdi

4. ASSEMBLY GUIDE

4.1 Mounting frame

For dimensions 3.5” and 4.3” the product with mounting frame version is available. Thanks to the four catches attached to the side, frame provides strong assembly to the surface by mounting element (like the screw, see Figure 1). The frames are specially designed to fit Riverdi products perfectly. The diameter of the mounting hole is 3.5mm.

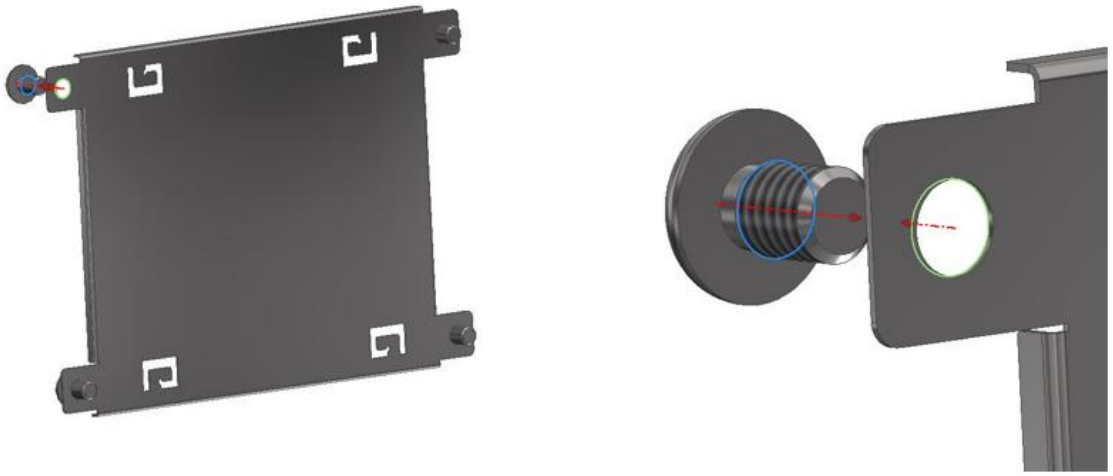

Figure 1. Mounting Frame

Revision:	Changes:	Date:
1.0	Initial Case, PCN: RVD002-107	2026.11.18

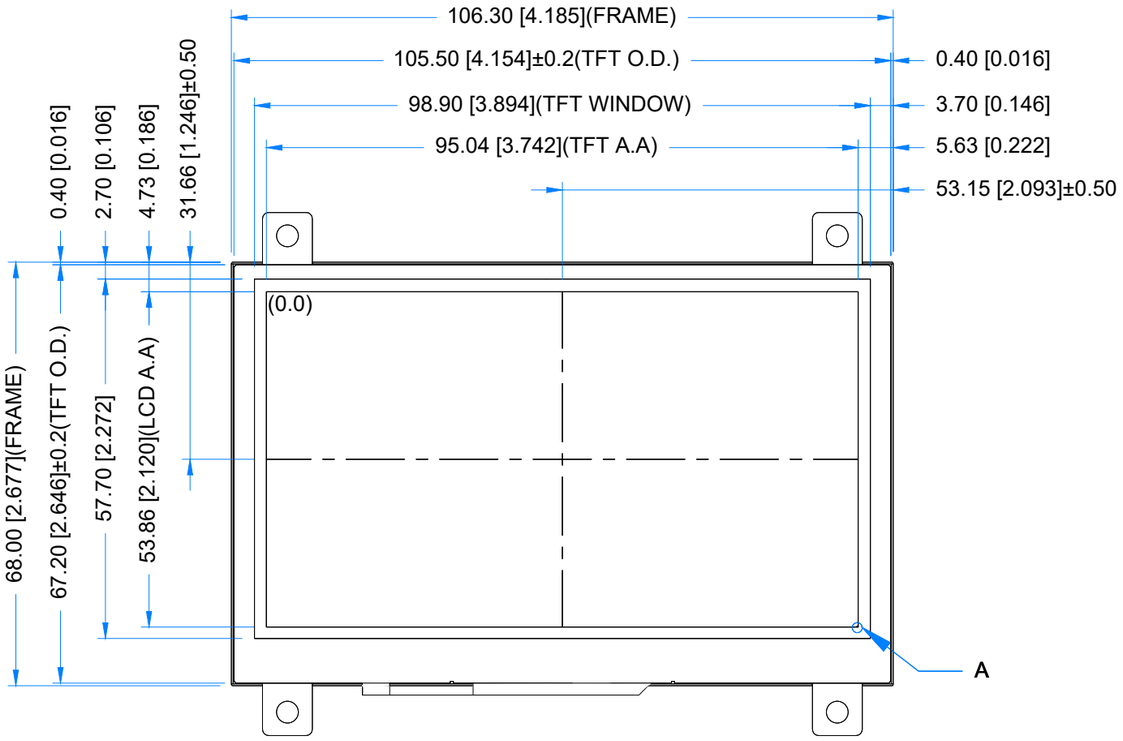

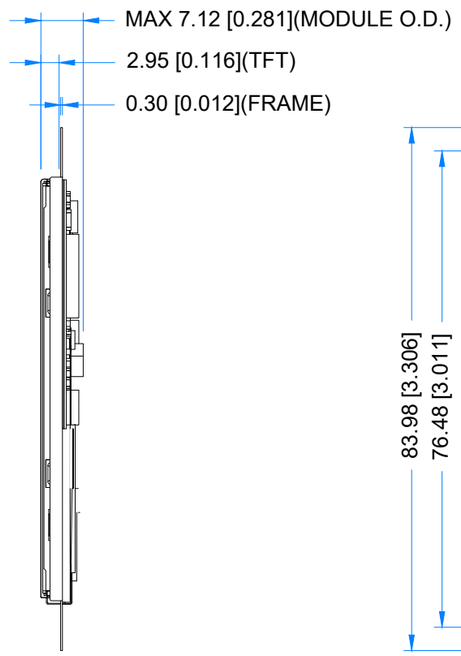

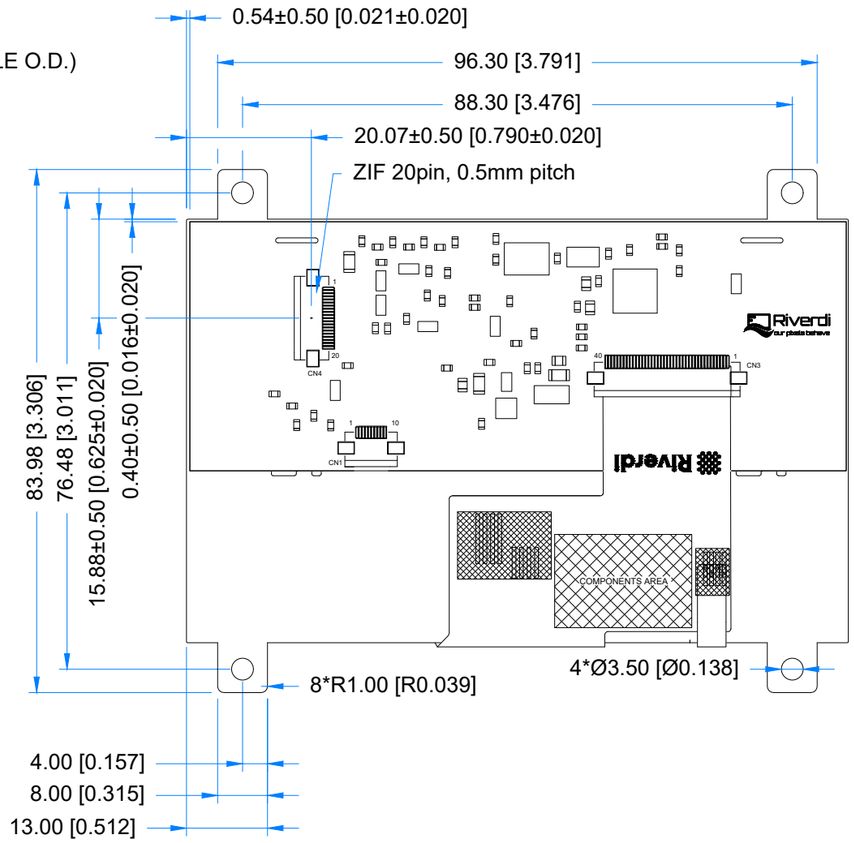

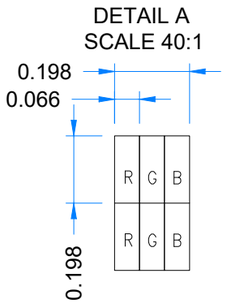

TFT NOTES:
1. DISPLAY TYPE: TRANSMISSIVE, NORMALLY WHITE
2. RESOLUTION: 480x272
3. VIEWING ANGLE: 12 O'CLOCK
4. INTERFACE: SPI/I2C
5. DRIVER IC ON THE BOARD: FT800
6. SUPPLY VOLTAGE FOR MODULE: 3.3V

GENERAL NOTES:
1. SURFACE LUMINANCE: 550cd/m^2
2. OPERATING TEMPERATURE: -20°C ~ 70°C
3. STORAGE TEMPERATURE: -30°C ~ 80°C
4. WITHOUT INDIVIDUAL TOLERANCE: ±0.3mm
5. RoHS COMPLIANT

PN: RVT4.3B480272CFWN00 V5				Riverdi
SN:				
DRAWN:	M.Stabinski	2026.11.18	1:0.99	
CHECKED:	M.Wierzbowski	2026.11.18	[mm]	
APPR:	M.Wierzbowski	2026.11.18	ISO A3	P. 1 of 1

6. ABSOLUTE MAXIMUM RATINGS

PARAMETER	SYMBOL	MIN	MAX	UNIT
Supply Voltage for Module	VDD	-0.3	3.6	V
Digital I/O signals (SPI/QSPI/GPIO) Voltage	VIN	-0.3	VDD	V
Supply voltage for Backlight	BLVDD	-0.3	7.0	V
Operating Temperature	T_{OP}	-20	70	°C
Storage Temperature	T_{ST}	-30	80	°C

Note. The above are maximum values. If exceeded, they may cause permanent damage to the unit.

7. ELECTRICAL CHARACTERISTICS

PARAMETER	SYMBOL	MIN	TYP	MAX	UNIT	NOTE
Supply Voltage for Module	VDD	3.0	3.3	3.6	V	
Input Voltage for LED Inverter	BLVDD	2.8	3.3	5.5	V	
LED Backlight Current	$IDD_{backlight}$	-	260	325	mA	BLVDD=3.3V
LED Backlight Current	$IDD_{backlight}$	-	150	187	mA	BLVDD=5V
Input Voltage “H” Level	V_{IH}	0.7VDD	-	VDD	V	
Input Voltage “L” Level	V_{IL}	0	-	0.2VDD	V	
LED Life Time	-	30000	50000	-	Hrs	Note 1

Note 1: The LED life time is defined as the module brightness decrease to 50% original brightness at Ta=25°C.

8. ELECTRO-OPTICAL CHARACTERISTICS

ITEM	SYMBOL	CONDITION	MIN	TYP	MAX	UNIT	RMK	NOTE
Response Time	Tr+Tf	θ=0° ø=0° Ta=25 °C	-	25	50	ms	FIG 2.	4, 7
Contrast Ratio	Cr		400	500	-	---	FIG 3.	1, 7
Surface Luminance	Lv		-	550	-	cd/m2		2, 7
Luminance Uniformity	δ WHITE		80	-	-	%		3
Viewing Angle Range	θ	ø = 90°	40	50	-	deg	FIG 4.	6
		ø = 270°	60	70	-	deg		
		ø = 0°	60	70	-	deg		
		ø = 180°	60	70	-	deg		
CIE (x, y) Chromaticity	Rx	θ=0° ø=0° Ta=25 °C	0.546	0.596	0.646	-	FIG 3.	5,7
	Ry		0.312	0.362	0.412	-		
	Gx		0.277	0.327	0.377	-		
	Gy		0.524	0.574	0.624	-		
	Bx		0.097	0.147	0.197	-		
	By		0.016	0.066	0.116	-		
	Wx		0.236	0.286	0.336	-		
	Wy		0.256	0.306	0.356	-		
NTSC ratio	-	-		55.2	-	%		

Note 1. Contrast Ratio (CR) is defined mathematically as below, for more information see Figure 2.

$$\text{Contrast Ratio} = \frac{\text{Average Surface Luminance with all white pixels (P1, P2, P3, P4, P5)}}{\text{Average Surface Luminance with all black pixels (P1, P2, P3, P4, P5)}}$$

Note 2. Surface luminance is the LCD surface from the surface with all pixels displaying white. For more information see Figure 3.

Lv = Average Surface Luminance with all white pixels (P1, P2, P3, P4, P5)

Note 3. The uniformity in surface luminance δ WHITE is determined by measuring luminance at each test position 1 through 5, and then dividing the minimum luminance of 5 points luminance by maximum luminance of 5 points luminance. For more information see Figure 3.

$$\delta \text{ WHITE } = \frac{\text{Minimum Surface Luminance with all white pixels (P1, P2, P3, P4, P5)}}{\text{Maximum Surface Luminance with all white pixels (P1, P2, P3, P4, P5)}}$$

Note 4. Response time is the time required for the display to transition from white to black (Rise Time, Tr) and from black to white (Decay Time, Tf). For additional information see Figure 2. The test equipment is BM-7A.

Note 5. CIE (x, y) chromaticity, the x, y value is determined by measuring luminance at each test position 1 through 5, and then make average value.

Note 6. For TFT module, viewing angle is the angle at which the contrast ratio is greater 10. The angles are determined for the horizontal or x axis and the vertical or y axis with respect to the z axis which is normal to LCD surface. For more information see Figure 4.

Note 7. Viewing angle is measured at the center point of the LCD by CONOSCOPE (ergo-80). For response time testing, the testing data is based on BM-7A. Instruments for Contrast Ratio, Surface Luminance, Luminance Uniformity, Chromaticity the test data is based on SR-3A.

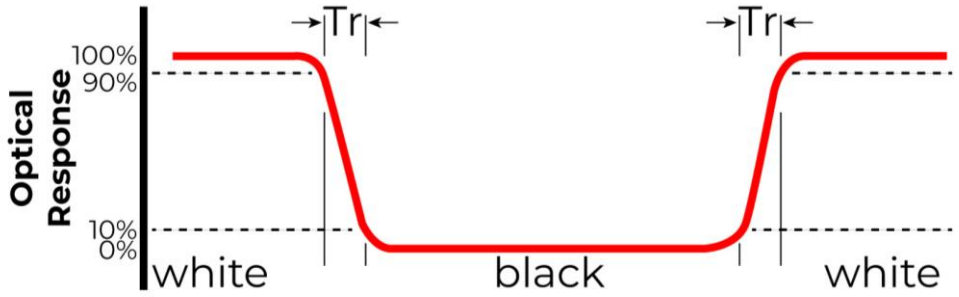

Figure 2. The definition of response time

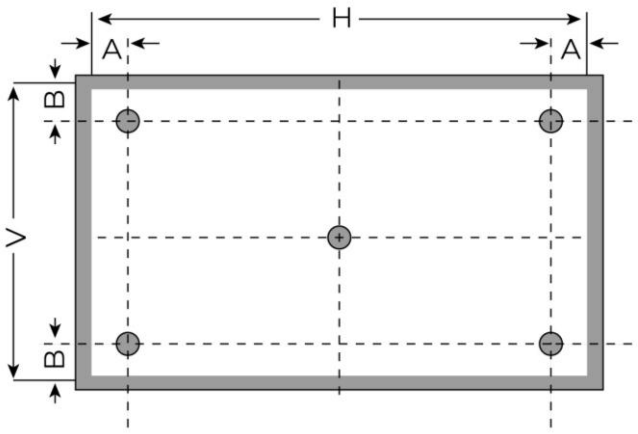

A: 5mm

B: 5mm

H, V: Active Area

Light spot size ∅=5mm, 500mm distance from the LCD surface to detector lens.

Measurement instrument is SR-3A

Figure 3. Measuring method for Contrast ratio, surface luminance, Luminance uniformity, CIE (x, y) chromaticity

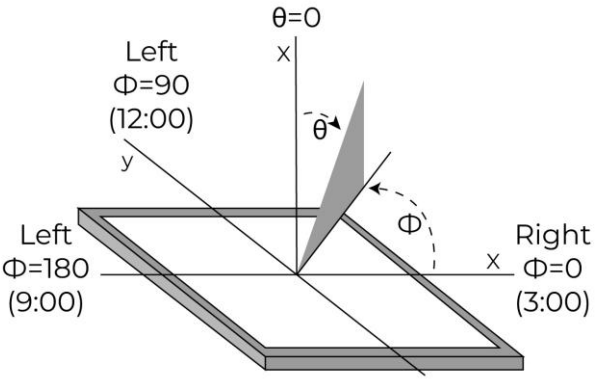

Figure 4. The definition of viewing angle

9. INTERFACES DESCRIPTION

PIN	SYMBOL	DESCRIPTION
1	VDD	Power supply
2	GND	Ground
3	SPI_SCLK/I2C_SCL	SPI clock / I2C clock
4	MISO/I2C_SDA	SPI data output (MISO) / I2C data (SDA)
5	MOSI/I2C_SA0	SPI data input (MOSI) / I2C address select (SA0)
6	CS/I2C_SA1	SPI chip select / I2C address select (SA1)
7	INT	Interrupt output
8	PD	Power down
9	MODE	Interface mode selection (SPI/I2C)
10	AUDIO_OUT	Audio output
11	NC	No connection
12	NC	No connection
13	NC	No connection
14	NC	No connection
15	NC	No connection
16	NC	No connection
17	BLVDD	Backlight power supply
18	BLVDD	Backlight power supply
19	BLGND	Backlight ground
20	BLGND	Backlight ground

© 2026 Riverdi

10. FT800 CONTROLLER SPECIFICATIONS

FT800 or EVE (Embedded Video Engine) simplifies the system architecture for advanced human machine interfaces (HMIs) by providing functionality for display, audio, and touch as well as an object-oriented architecture approach that extends from display creation to the rendering of the graphics.

10.1 Serial host interface

Figure 1.SPI interface connection

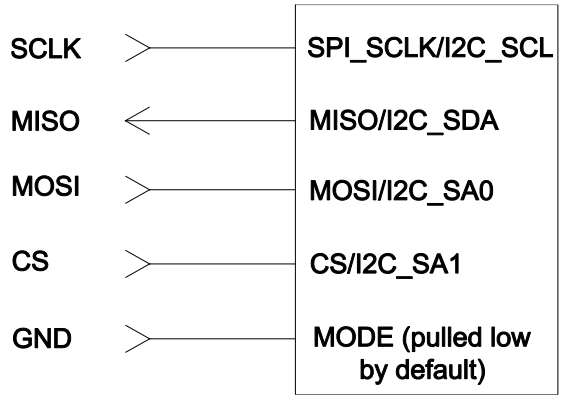

Figure 2.I2C interface connection

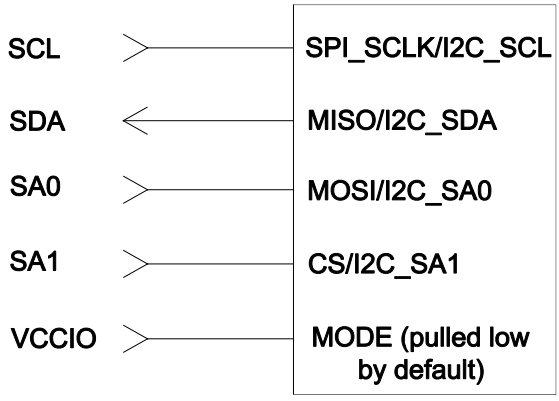

SPI Interface – the SPI slave interface operates up to 30MHz.

Only SPI mode 0 is supported. The SPI interface is selected by default (MODE pin is internally pulled low by 47k resistor).

I²C Interface – the I²C slave interface operates up to 3.4MHz, supporting standard-mode, fast-mode, fast-mode plus and high-speed mode.

The I²C device address is configurable between 20h to 23h depending on the I²C_SA[1:0] pin setting, i.e. the 7-bit I²C slave address is 0b'01000A1A0.

The I²C interface is selected when the MODE pin is tied to VDDIO.

10.2 Block Diagram

Figure 3. FT800 Block diagram

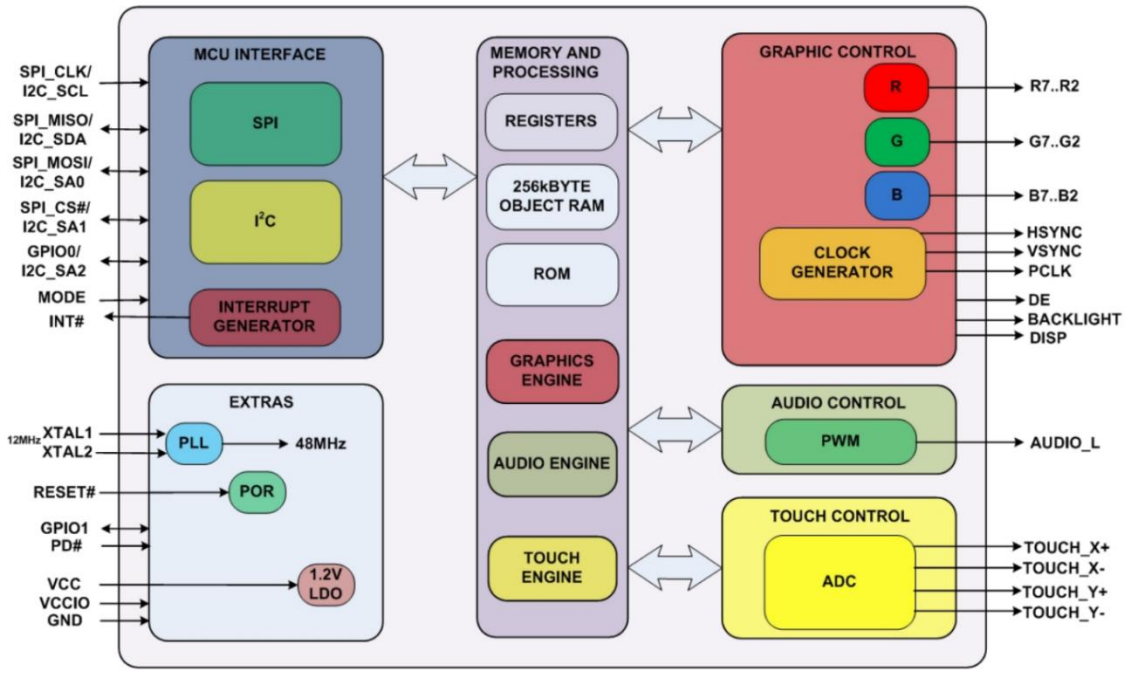

10.3 Host interface SPI mode 0

Figure 4. SPI timing diagram

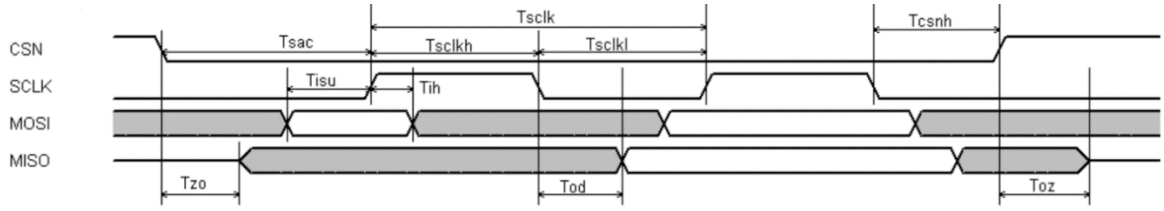

For more information about FT801 controller please go to official FT800 Datasheet.
http://www.ftdichip.com/Support/Documents/DataSheets/ICs/DS_FT800.pdf

10.4 Backlight driver block diagram

Backlight enable signal is internally connected to FT800 Backlight control pin. This pin is controlled by two FT800's registers. One of them specifies the PWM output frequency, second one specifies the duty cycle. Refer to FT800 datasheet for more information.

Figure 5. Backlight driver block diagram

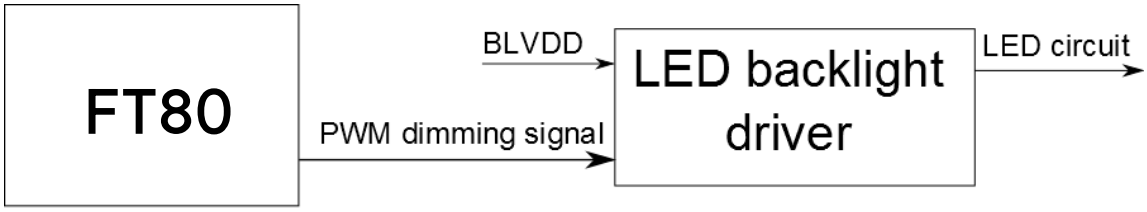

11. TIMING CHARACTERISTICS

11.1 Timing table

PARAMETER		SYMBOL	MIN	TYP	MAX	UNIT
DCLK frequency		Fclk	8	9	12	MHz
DCLK Period		Tclk	83	111	125	ns
HSYNC	Period Time	Th	485	531	598	DCLK
	Display Period	Thdisp		480		
	H_{sync} Back Porch	Thbp	3	43	43	
	H_{sync} Front Porch	Thfp	2	8	75	
	H_{sync} Pulse Width	Thw	2	4	75	
VSYNC	Period Time	Tv	276	292	321	HSYNC
	Display Period	Tvdisp	272			
	V_{sync} Back Porch	Tvbp	2	12	12	
	V_{sync} Front Porch	Tvfp	2	8	37	
	V_{sync} Pulse Width	Tvw	2	4	37	

11.2 SYNC Mode Timing Diagram

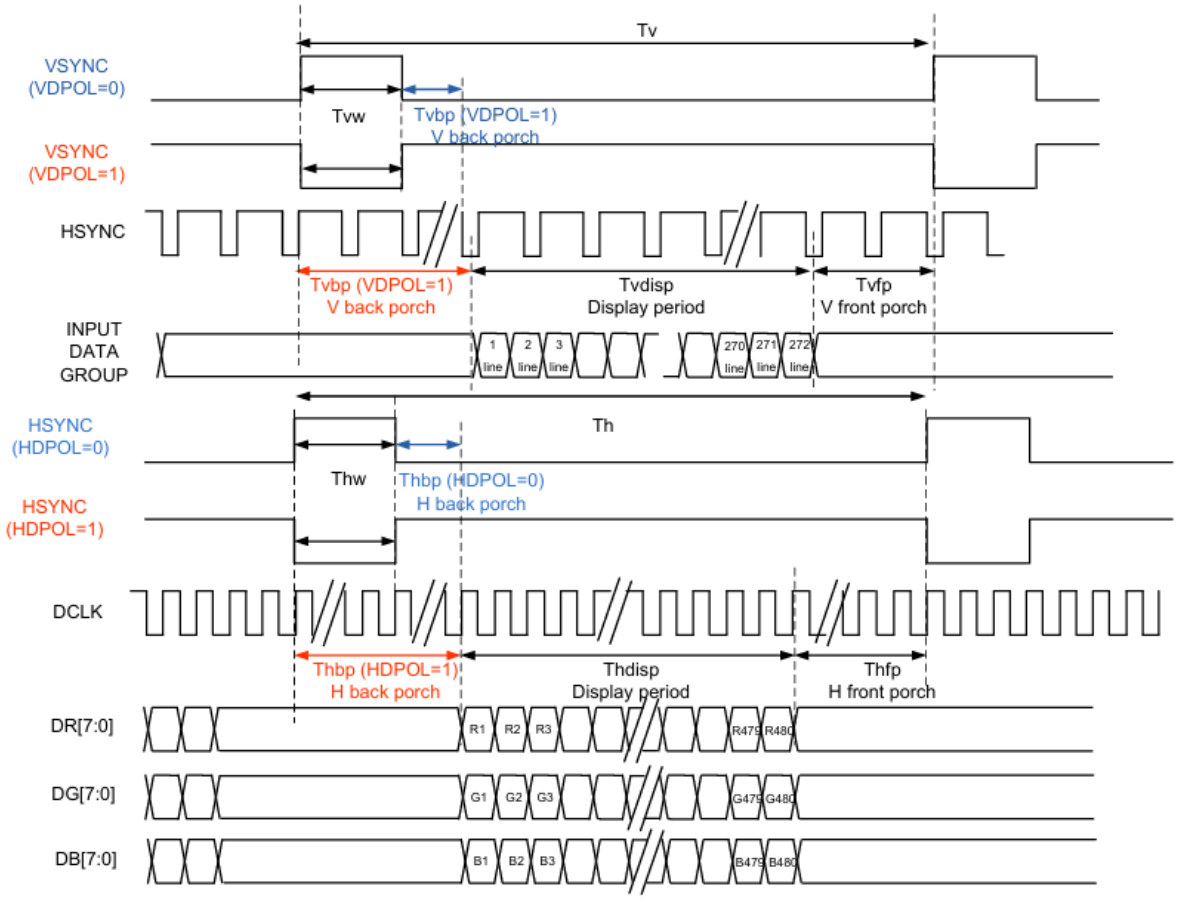

11.3 SYNC-DE Mode Timing Diagram

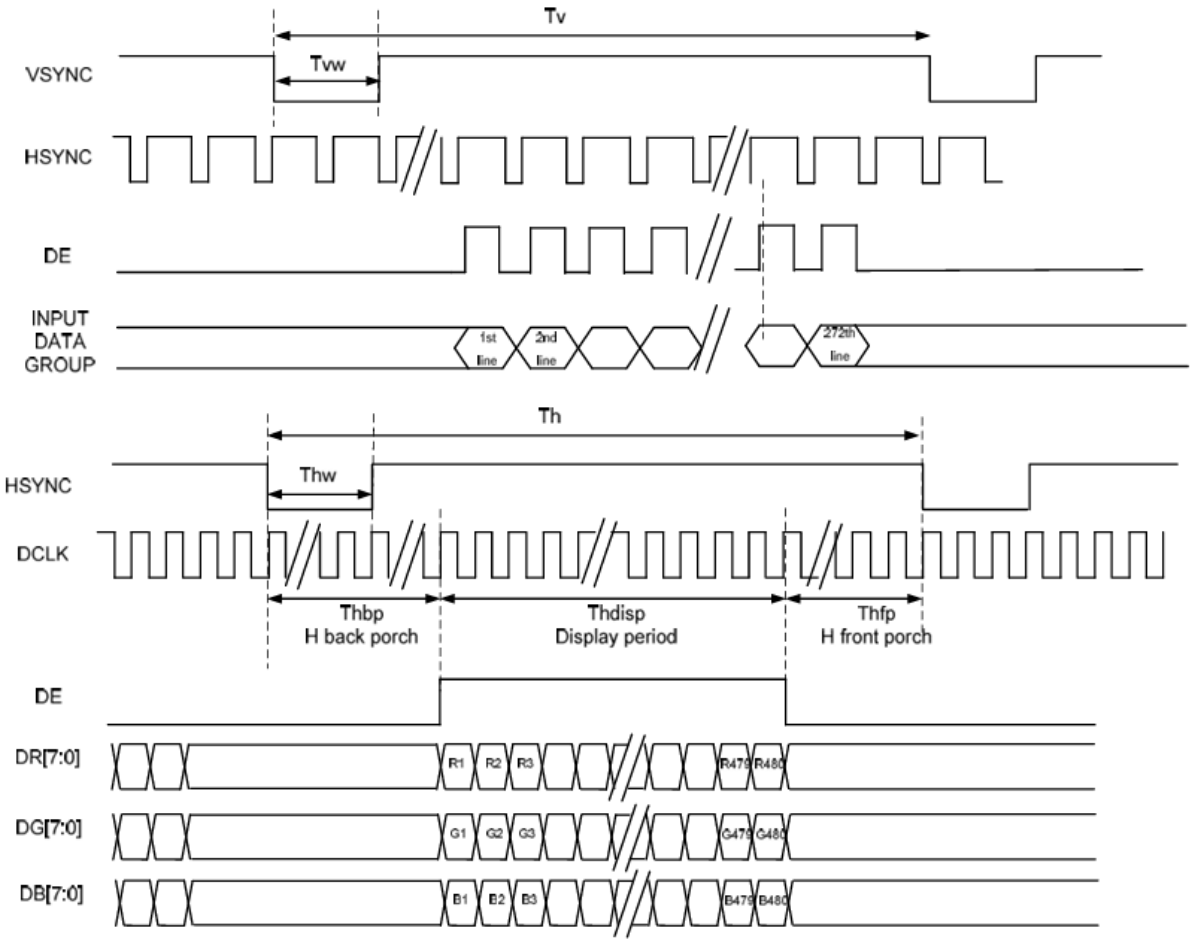

11.4 DE Mode Timing Diagram

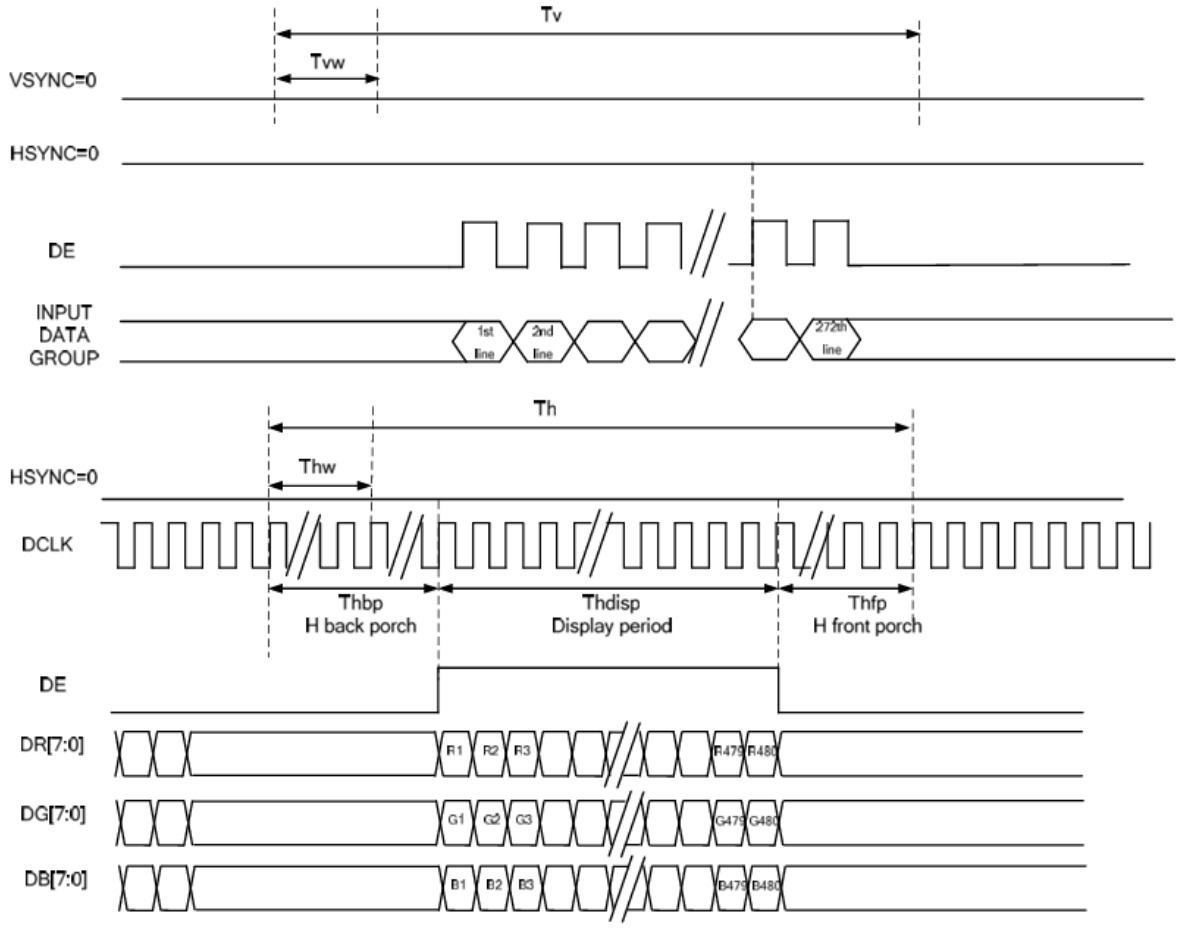

12. INSPECTION

Standard acceptance/rejection criteria for TFT module according to document available here.

13. RELIABILITY TEST

NO.	TEST ITEM	TEST CONDITION	NOTE
1	High Temperature Storage	80℃ ± 2℃ / 240Hrs.	IEC60068-2-2 GB2423.2
2	Low Temperature Storage	-30℃ ± 2℃ / 240Hrs.	IEC60068-2-1 GB2423.1
3	High Temperature Operating	70℃ ± 2℃ / 240Hrs.	IEC60068-2-2 GB2423.2
4	Low Temperature Operating	-20℃ ± 2℃ / 240Hrs.	IEC60068-2-1 GB2423.1
5	High Temperature and High Humidity Operation Test	60 ± 5℃, 90%RH 240Hrs.	IEC60068-2-3 GB/T2423.3
6	Thermal Shock Test (Non-operating)	-20±2℃(30Min.)~25±2℃(5Min.)~60±2℃(30Min.) 10Cycles	IEC60068-2-14 GB2423.22
7	Vibration Test (Non-operating)	Frequency: 10~55Hz Amplitude: 1.5mm Sweep Time: 11Mins Test Period: 6 Cycles For Each Direction of X, Y, Z (Packing Condition)	IEC60068-2-6 GB2423.10
8	Electro Static Discharge Test	R: 330Ω, C:150pF, 5points/panel Air: ±8KV, 10times; Contact: ±4KV, 10times; (Environment: 15℃~35℃, 30%~60%, 86Kpa~106Kpa)	IEC61000-4-2 GB/T17626.2

Note 1: Without water condensation.

Note 2: The function test shall be conducted after 2 hours storage at the room temperature (25℃±2℃) and room humidity (65%±5%) after removed from the test chamber. In the standard conditions, there shall be no functional defects occurred.

© 2026 Riverdi

14. LEGAL INFORMATION

CE marking is usually obligatory only for a complete end product. Riverdi display modules are semi-finished goods which are used as inputs to become part of the finished products.

Therefore, Riverdi display modules are not CE marked.

This is not a standalone product. It was designed as an electronic component. It needs integration with a whole system to be fully functional.

Riverdi grants the guarantee for the proper operation of the goods for a period of 12 months from the date of possession of the goods. If in a consequence of this guaranteed execution the customer has received the defects-free item as replacement for the defective item, the effectiveness period of this guarantee shall start anew from the moment the customer receives the defects-free item.

Information about device is the property of Riverdi and may be the subject of patents pending or granted. It is not allowed to copy or disclosed this document without prior written permission.

Riverdi endeavors to ensure that all contained information in this document is correct but does not accept liability for any error or omission. Riverdi products are in developing process and published information may be not up to date. Riverdi reserves the right to update and makes changes to Specifications or written material without prior notice at any time. It is important to check the current position with Riverdi.

Images and graphics used in this document are only for illustrative the purpose. All images and graphics are possible to be displayed on the range products of Riverdi, however the quality may vary. Riverdi is no liable to the buyer or to any third party for any indirect, incidental, special, consequential, punitive, or exemplary damages (including without limitation lost profits, lost savings, or loss of business opportunity) relating to any product, service provided or to be provided by Riverdi, or the use or inability to use the same, even if Riverdi has been advised of the possibility of such damages.

Riverdi products are not fault tolerant nor designed, manufactured or intended for use or resale as on line control equipment in hazardous environments requiring fail–safe performance, such as in the operation of nuclear facilities, aircraft navigation or communication systems, air traffic control, direct life support machines or weapons systems in which the failure of the product could lead directly to death, personal injury or severe physical or environmental damage (‘High-Risk Activities’). Riverdi and its suppliers specifically disclaim any expressed or implied warranty of fitness for High-Risk Activities. Using Riverdi products and devices in 'High-Risk Activities' and in any other application is entirely at the buyer’s risk, and the buyer agrees to defend, indemnify and hold harmless Riverdi from all damages, claims or expenses resulting from such use. No licenses are conveyed, implicitly or otherwise, under any Riverdi intellectual property rights.

15. CONTACT

Your Success is Our Priority

Stuck on a technical challenge? Need expert guidance?
Our dedicated support team is just a message away.

Contact us at
contact@riverdi.com

We're here to ensure your project's success, every step of the way!